HydroBook™

Hydrographic Echo Sounder

USER'S MANUAL

ENGLISH EDITION

August 2, 2013

UNABARA
CORPORATION
P.O. Box 1843, Gretna, Louisiana 70054 USA
(504) 324-1803 Email: marketing@unabara.us

www.hydrobook.info
© 2013 Unabara Corporation; All Rights Reserved
US & Foreign Patents Pending

Product Overview

Unabara's **HydroBook** Hydrographic Echo Sounder utilizes your survey system's Windows NoteBook PC (or laptop/tablet) as a control and display device; operation can be standalone or in the background of your HYPACK, HydroPro, QINSy, CARIS or other mapping software. All electronics and transducer elements are contained in a single underwater package denoted the Below Surface Unit(BSU). The BSU has two communication ports . COM 1 is dedicated as the control and monitoring port to communicate with the HydroBook software APP which will be installed on the user's PC.

COM 2 provides depth and other information to your PC in standard industry formats selectable by the user from DESO-25, ODOM-ET, NMEA-DBS, NMEA-DBT, NMEA-DPT or HYDROBOOK. Baud rate is selectable, 9600 to 115,200, 8N1.

Data from COM 2 is used by your hydrographic mapping software to generate a chart display on your PC if desired, and to provide real-time depths needed by your mapping software.

Both COM ports are RS-232 type but each HydroBook is provided with two RS-232 to USB adapter cables to use if your PC has only USB ports.

Unabara's **HydroBook** brings a number of "firsts" to the industry. HydroBook is the result of the vertical integration of design and manufacture. We do not use a low performance "off-the-shelf" acoustic transducer as many echo sounder manufacturers do. Our transducer element is our proprietary design integral to the BSU. While the HydroBook is capable of operating at industry standard 200 & 210 Khz. frequencies, the HydroBook user can select the range of 180 Khz. thru 280 Khz. with corresponding transducer beamwidths. *Most important, our low-ringing, minimum sidelobe transducer element design allows a minimum operating depth of 0.10 meter (4 inches).*

Another "first" is the resolution to the millimeter (0.001 m) on the 25 meter range. Beyond that, up to 200 meters, we achieve centimeter (0.01 m) resolution.

With regard to sounding rate (ping rate), HydroBook users are not limited to 5, 6 or 10 hertz. as users of some other products are. HydroBook users may select up to 30 hertz ping rate on the 25 meter range.

Operation of the HydroBook is automatic with adaptive auto echo control and auto gate; 10 Log, 20 Log and 30 Log TVG curves are applied automatically by an adaptive algorithm. A manual gate feature, more applicably termed blanking gate is provided to ignore thermoclines and other disruptions in the water column.

The HydroBook's PC APP provides an on screen display of real-time depth, sea surface temperature, real-time sea bottom loss and all set-up parameters (i.e. offset, sound velocity, blanking, ping rate, range & output type). The user may change set-up parameters at will via this display.

In addition, the PC APP provides a "mini-chart" display to allow the user to observe real-time sea bottom contours and monitor the performance of the HydroBook during a survey. This display also shows direct measurement of echo reflectivity, computed bottom loss and transmission loss. The lower the bottom loss, the more dense and harder the bottom is while a bottom with high loss indicates a silt or soft bottom.

The HydroBook can provide automatic depth input to Unabara's **HydroBar** to allow automatic bar check calibration. For full information on the HydroBar, including a users manual, see the web presentation available at: www.hydrobar.info

Specification Overview

Depth Range: 0.1 meter to 200 meters
0.3 feet to 660 feet

Depth Resolution: 0.001 meter (1 millimeter) 25 meter range
0.01 (1 centimeter) above 25 meter range
0.1 foot

Minimum Depth: 0.1 meters (below bottom face of BSU)
0.3 feet

Frequency Agility: 180 Khz. thru 280 Khz.

Acoustic Beamwidth: 10 degrees thru 5.0 degrees
(see Figure 1 – Beamwidth/Ensonification @ 10 meters depth)

Ping (sounding rate): User-selectable 5 thru 30 hertz.

TVG: 10 Log, 20 Log or 30 Log (auto selected based upon depth)

User Inputs (via PC APP):

- Range & Units (feet or meters)
- Frequency/Beamwidth
- Offset (Draft + Index)
- Sound Velocity
- Gate
- Output Type & Baud Rate
- Ping (sounding) Rate
- On/Off

COM PORTS: COM 1 – Dedicated to HydroBook APP Sofware
COM 2 – Depth Output to PC (for Hypack or other)

COM 2 Baud Rate: 9600, 19200, 38400, 57600 or 115200; 8N1
(SEE APPENDIX A FOR DATA OUTPUTS)

Power Input: 12 volts D.C. (11 to 16 vdc nominal) @ 125 ma.

Beamwidth/Ensonification

The below figure serves to give the user a perspective of sonar beam diameter (Cell Footprint) at various beamwidths, at an example depth of 10 meters. For planning and reference during surveys, the HydroBook provides a real-time display of the diameter of the ensonified footprint at the current depth of survey.

Figure 1

Below the various acoustic frequencies and corresponding beamwidths of the HydroBook are presented along with the beamwidth diameter in meters (rounded) of the respective ensonified footprint @ 10 meters.

Frequency (kHz)	*Wave Length (mm)*	*Beamwidth (deg)*	*Cell Footprint Diameter (Meters)*
180	8.33	10.0	1.7
190	7.89	9.5	1.6
200	7.50	9.0	1.6
210	7.14	8.5	1.5
220	6.82	8.0	1.4
230	6.52	7.5	1.3
240	6.25	7.0	1.2
250	6.00	6.5	1.1
260	5.77	6.0	1.0
270	5.56	5.5	1.0
280	5.36	5.0	0.9

HydroBook Hardware Deliverables

Each HydroBook system includes: - HydroBook Below Surface Unit (with 10 meter Cable & Weatherproof Plug) - BSU Adaptor Cable (BSU to COM 1/COM 2/Power Input) - USB-Memory Pod - User's Manual (English Edition) - 2 ea. RS-232 to USB Adaptors (for PC's without Serial Ports)

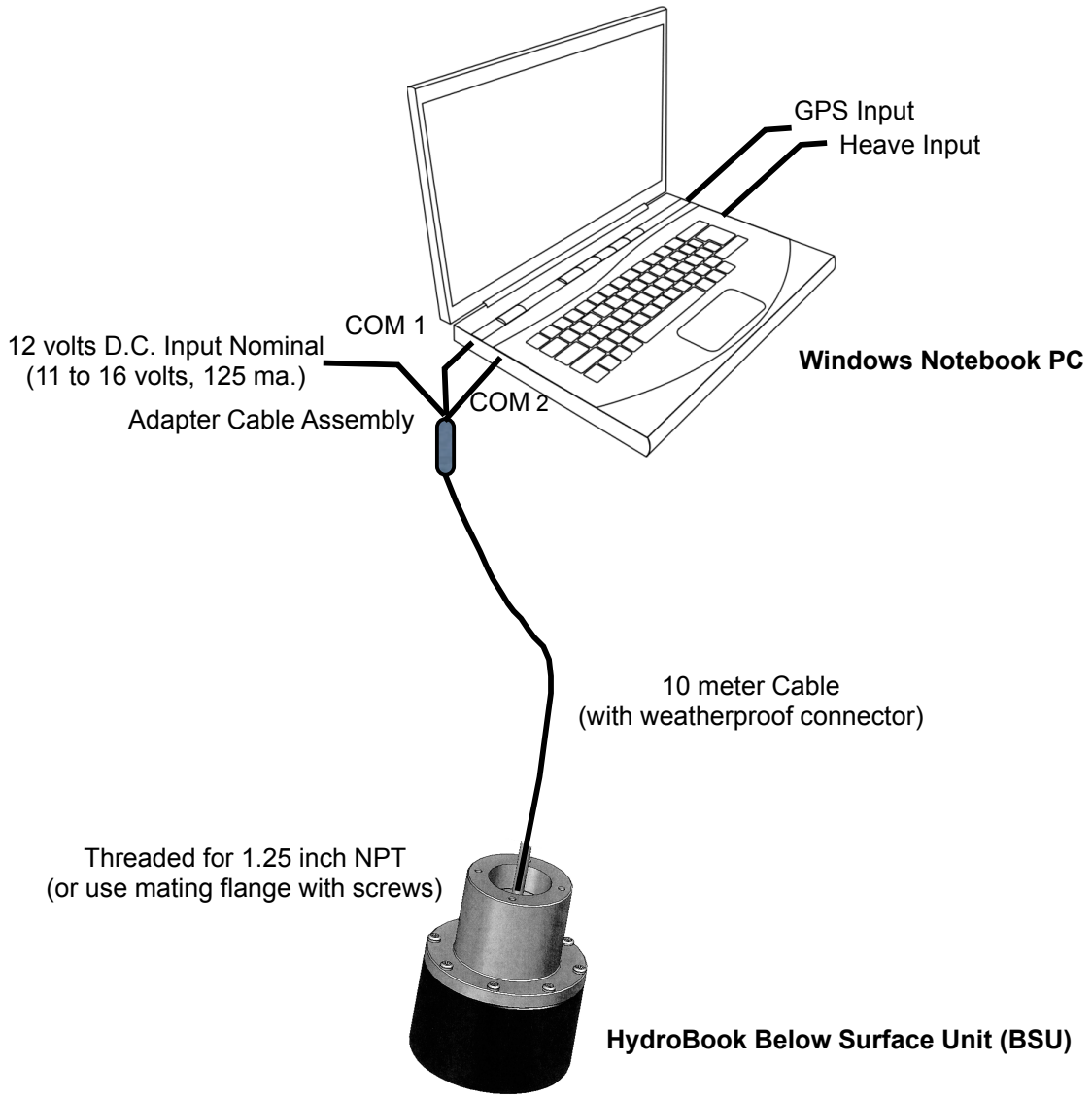

Figure 2

Below Surface Unit (BSC) - Outline & Mounting Details

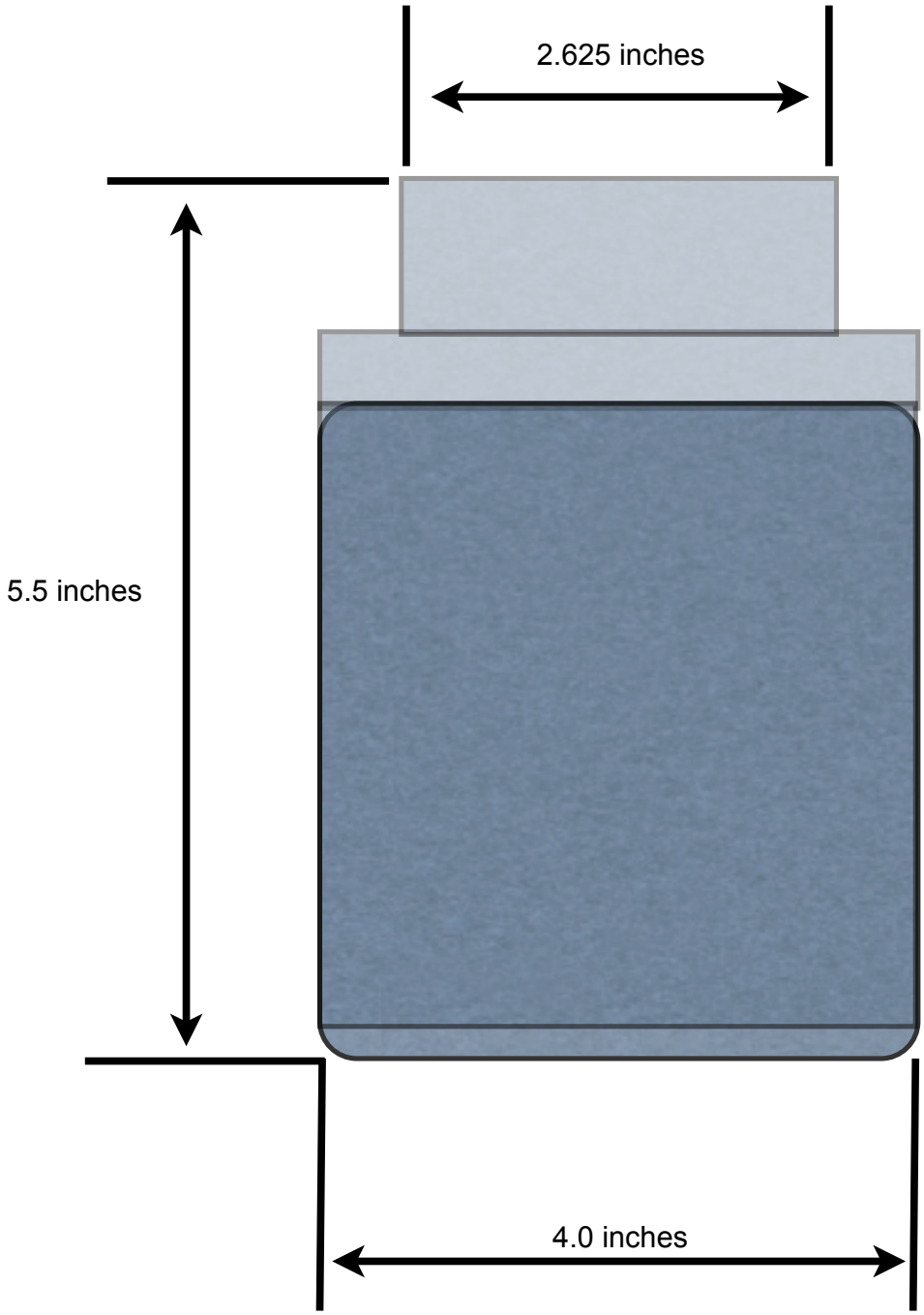

SIDE VIEW

Figure 3A Side View

Figure 3B Top View (below)

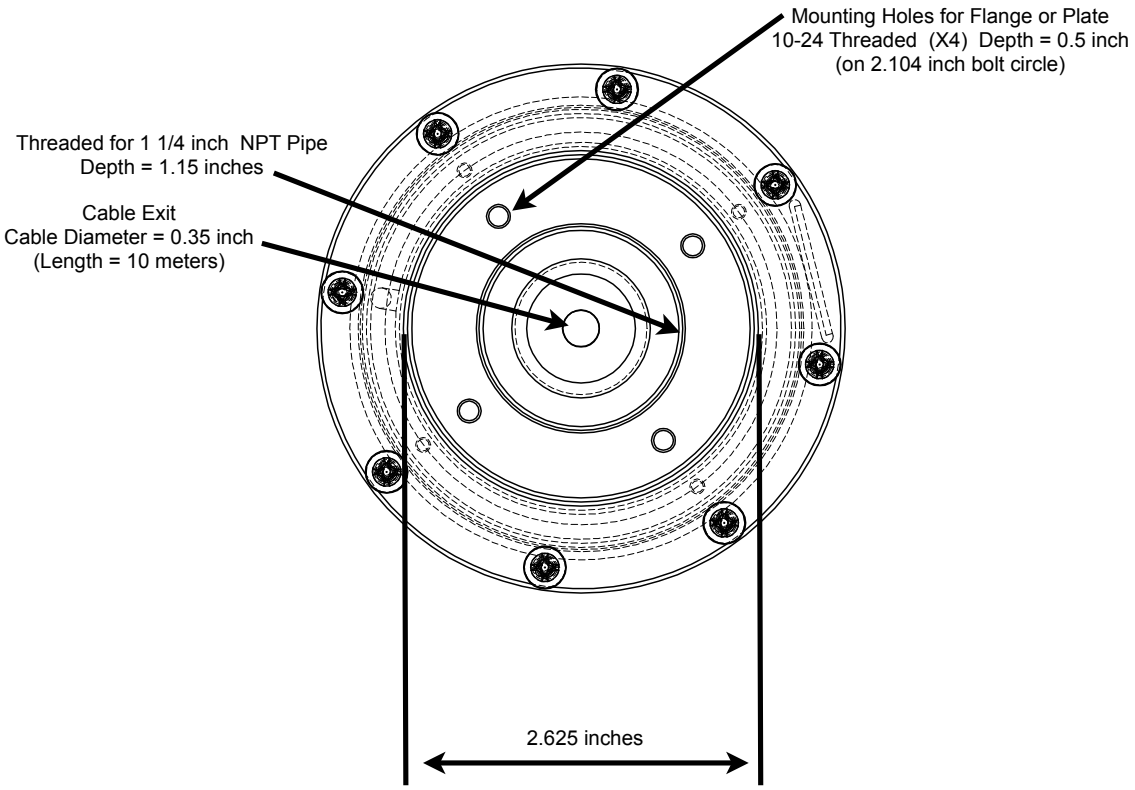

TOP VIEW

Connecting HydroBook BSU to PC

Figure 2 has shown the 10 meter cable attached to the BSU and its connection to the Adapter Cable Assembly. This assembly (Figure 4) has DB-9 connectors for **COM 1 (RED shell)** and **COM 2 (YELLOW shell)** which plug directly into your PC's serial ports. If you only have USB ports on your PC, refer to the instructions provided with the two RS-232 to USB converter cables supplied with your HydroBook.

This cable also is used to supply 12 volts d.c. power to your HydroBook.

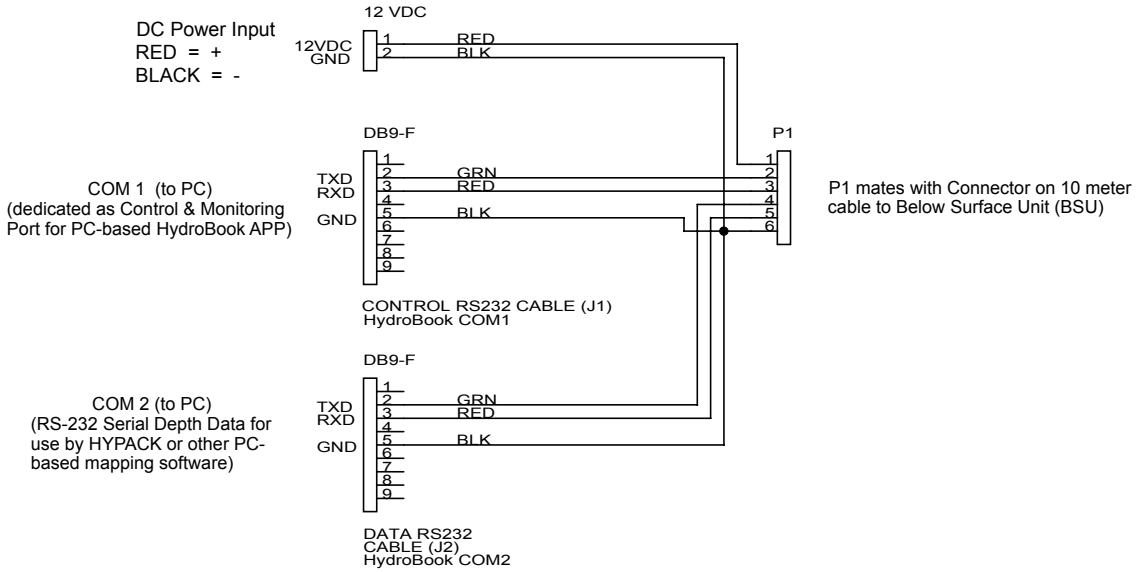

Figure 4
Adapter Cable Assembly – Connector Pinouts

Installing the HydroBook PC APP Software

Your HydroBook is supplied with a USB-Memory Pod which contains the required HydroBook PC APP software and SOFTWARE LICENSE AGREEMENT. ***AFTER READING AND AGREEING TO THE LICENSE, OPEN THE "READ ME" FILE; INSTRUCTIONS IN THIS FILE WILL STEP THE USER THRU INSTALLATION OF THE HYDROBOOK PC APP.***

The Memory Pod also contains this User's Manual (in PDF format).

HydroBook APP Screens & Their Use

Your HydroBook APP has three screens as part of its graphical user interface on your PC. When you first boot-up the APP, the MAIN SCREEN (Figure 5) will be shown (in STANDBY mode). This screen serves two purposes: 1) To allow the user to view real-time depth and other data, on demand, during your survey; 2) To allow the user to access the other two APP screens; SETTINGS SCREEN (Figure 6) and CHART SCREEN (Figure 8). Figure 7 is an example of the MAIN SCREEN in RUN mode after settings have been selected by the user.

Upon seeing the MAIN screen the first time, the user should select (click on) the SETTINGS icon (button). This will cause the SETTINGS screen to be displayed. The user can then change any of the default settings; and, of course, later use this screen any time he wishes to change any parameter. **Before closing the SETTINGS screen, user must click on the APPLY icon (button) to save any changes made.** Then select RUN icon (button) to begin sounding.

Selecting (clicking on) the CHART icon (button) causes the mini-chart (Figure 8) to be displayed.

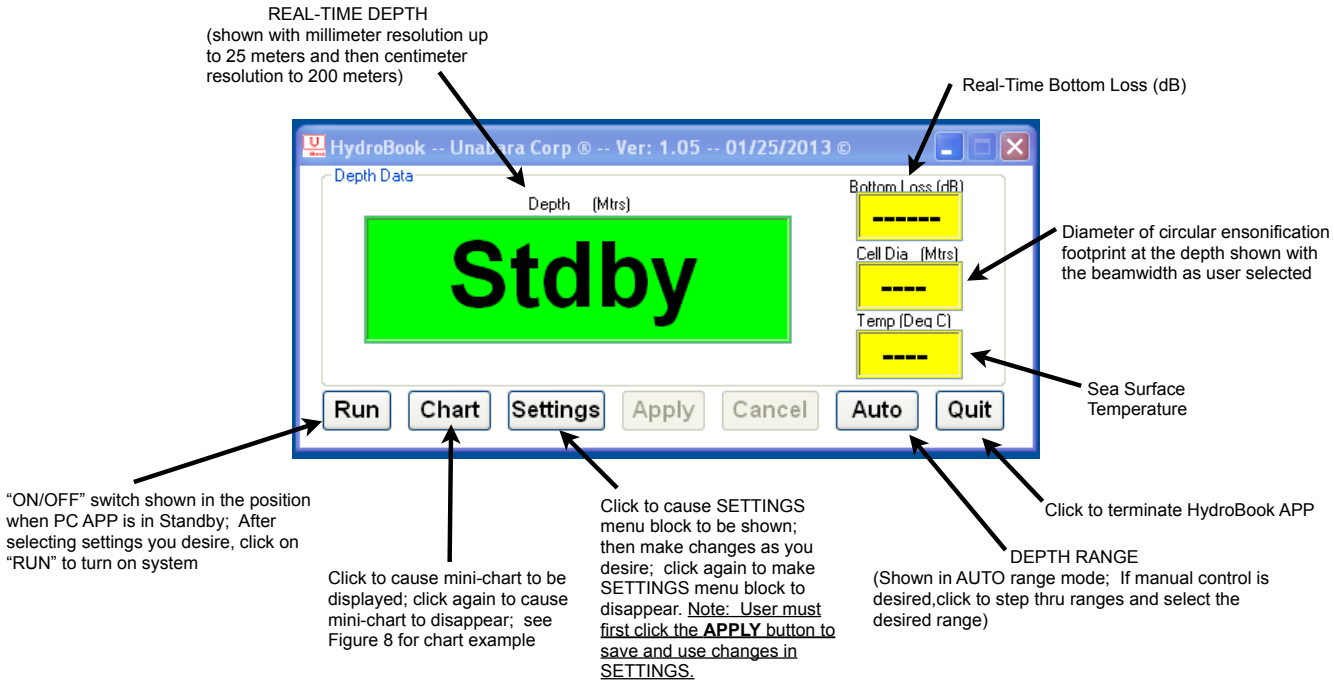

Important Note: User must put HydroBook in STANDBY mode (as evidenced by "Stdby" in Depth Window) before attempting to enter SETTINGS screen and make any changes. Also, before closing SETTINGS window, user must click on APPLY button to save changes made.

Figure 5 – MAIN screen

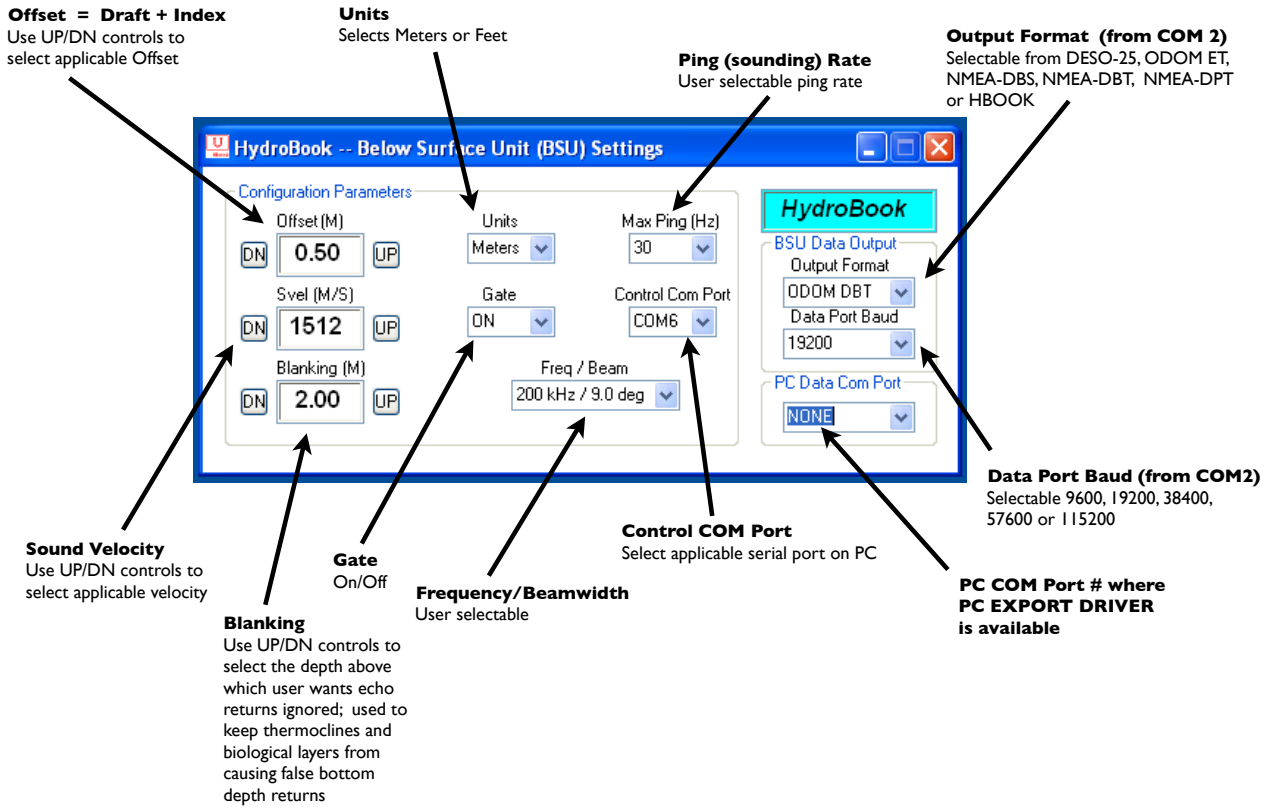

Figure 6 – SETTINGS screen

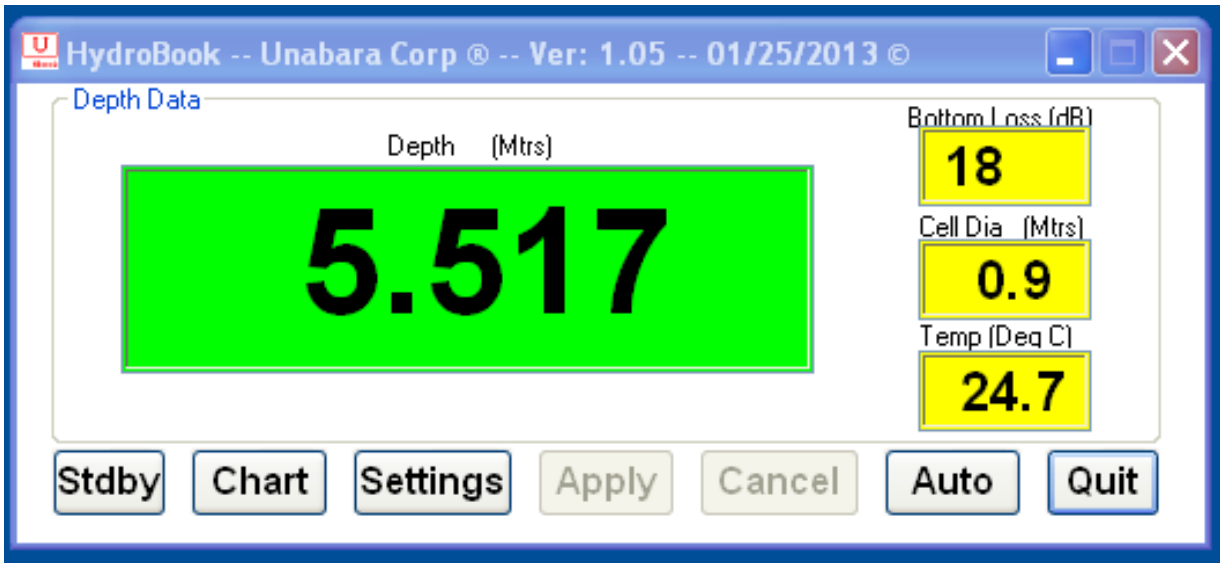

Figure 7 – MAIN screen (in RUN mode)

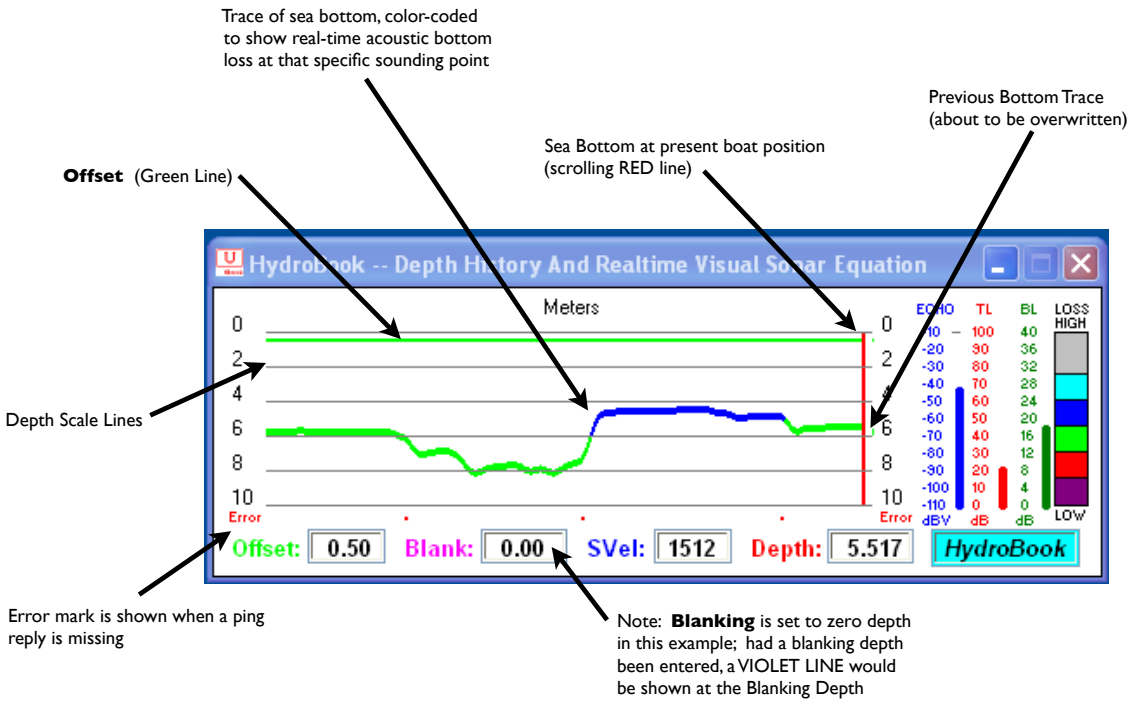

Figure 8 – CHART screen

To the right of the bottom trace are three histogram displays. Returned echo level (in dBv) is shown in BLUE (ECHO); Real-time transmission loss in the water column (at the indicated depth) is shown in RED (TL). Real-time bottom loss at the sounding point (scrolling red line) is shown in GREEN (BL).

Adjacent (right) to bottom loss (BL) scale is a six color palette which represents five 6 dB steps (beginning at 0 dB BL) and one 10dB step (from 30 to 40 dB BL). Color blocks on this palette references the various colors displayed in the bottom trace of the sea bottom. In the above trace (Figure 8), the BL ranges from 18 dB (Green) to 22 dB (Blue).

In general, a high bottom loss is usually indicative of a soft sediment type, perhaps high in clay content. A low bottom loss is likely to be associated with a hard bottom, perhaps mostly sand, gravel, oyster reef or the like. Thus bottom loss and sediment classification are directly related.

Acoustic characteristics of a specific sediment type will differ from other types due to differences in porosity, grain size and distribution, bulk density, plasticity, geochemistry (i.e. carbonate content) and other factors.

Various bottom classification systems have been developed over the years as accessory items for echo sounders. Some have been based upon analyzing the shape of the first reflected echo from the sea bottom. Others consider both the first echo and second echo (echo reflected off the surface after initial return from the bottom).

Unfortunately, the echo shape varies with changes in the echo sounder ping length, beamwidth, ping shape, gain, TVG, etc.. Also, the shape and power spectrum of the returned echo can change with depth even if the bottom type remains the same. Further, depth normalization must be done to compensate for spherical spreading and absorption.

No bottom classification method is an absolute. Whether using one of the "echo shape analysis" methods or using bottom loss values to contrast bottom type, ground-truthing is required. "Calibration" is done by visiting local areas of known bottom type and noting the response (echo shape or bottom loss).

Classification methods which use more than the first echo return must use a rather wide beamwidth, typically 12 degrees or greater. This is because a narrow beamwidth transducer may miss the second echo (depending upon boat speed). If bottom variability is at a smaller scale than the beam footprint, spatial resolution of the bottom differences will be poor and may not distinguish say clay and bolders, from say uniform gravel or the like.

Since the HydroBook computes bottom loss of every ping return, the user may select a very narrow beamwidh, thus small ensonification footprint. This provides optimal spatial resolution which allows bottom loss contrast in small increments.

Continuous bottom loss measurements and depth are available from the PC EXPORT DRIVER data sentence available on a user selected COM port of his PC. (See Appendix A for details). This data can be fed directly into HYPACK or similar program for overlay onto the hydrographic chart.

APPENDIX A

HydroBook Data Outputs

DATA SENTENCES AVAILABLE FROM BSU COM 2

NMEA DBT

```
    NMEA 183 sentence, depth below transducer
    in feet, meters and fathoms.

    ALL LEADING ZEROS DISPLAYED.
    36 Fixed Length ASCII Characters

    Checksum: 2 ASCII character, 8 bit XOR of
              all characters between "$" and "*".

           1     2 3      4 5     6 7
           |     | |      | |     | |
Ex: $SDDPT,xx.xx,f,xx.xxx,M,xx.xx,F*hh <CR><LF>
    0        1         2         3
    123456789012345678901234567890123 4  5   6

    Field Number
    1. Depth in feet: xx.xx < 100f, xxx.x > 100f
    2. f = units in feet
    3. Depth in meters: xx.xxx < 25M, xxx.xx > 25M
    4. M = units in meters
    5. Depth in fathoms: xx.xx
    6. F = units in fathoms
    7. Checksum
```

NMEA DBS

```
    NMEA 183 sentence, depth below surface in
    feet, meters and fathoms.

    ALL LEADING ZEROS DISPLAYED.
    36 Fixed Length ASCII Characters

    Checksum: 2 ASCII character, 8 bit XOR of
              all characters between "$" and "*".

           1     2 3      4 5     6 7
           |     | |      | |     | |
Ex: $SDDPT,xx.xx,f,xx.xxx,M,xx.xx,F*hh <CR><LF>
    0        1         2         3
    123456789012345678901234567890123 4  5   6

    Field Number
    1. Depth in feet: xx.xx < 100f, xxx.x > 100f
    2. f = units in feet
    3. Depth in meters: xx.xxx < 25M, xxx.xx > 25M
```

```
    4. M = units in meters
    5. Depth in fathoms: xx.xx
    6. F = units in fathoms
    7. Checksum
```

NMEA DPT

```
    NMEA 3.01 sentence, depth below transducer
    with offset and max depth range. Depth returned
    in meters only.

    ALL LEADING ZEROS DISPLAYED.
    27 Fixed Length ASCII Characters

    Checksum: 2 ASCII characters; 8 bit XOR of
              all characters between "$" and "*".
           1      2    3   4
           |      |    |   |
Ex: $SDDPT,xxx.xx,x.xx,rrr*hh <CR><LF>
    0        1         2
    123456789012345678901234 5  6   7

    Field Number
    1. Depth in meters: xx.xxx < 25M, xxx.xx > 25M
    2. Offset in meters: x.xx
    3. Maximum depth range in meters
    4. Checksum
```

ODOM-DBT

```
    ODOM EchoTrac "dbt", dual channel ASCII depth
    string corrected for offset.

    12 Fixed Length ASCII Characters

    1
    |2
    ||3
    |||4
    ||||5
    |||||6
    ||||||7
    |||||||
Ex: fETeb ddddd <CR>
    0        1
    1234567890  1

    Field Number
    1. Fix Mark: F=fix, <SP> no fix
```

```
    2. Units: ET=feet, et=meters
    3. Data Error: E=error, <SP> no error
    4. Band: H=Hi Freq, L=LO Freq
    5. Space
    6. Depth:
          Feet:   ddddd = 1234.5
          Meters: ddddd = 123.45
```

DESO-25

```
    14 Fixed Length ASCII Characters
    Ex: DA00200.00 m<CR><LF>
        DA00656.00ft<CR><LF>

    1
    |2
    ||3
    |||       4
    |||       |
    |||       |
Ex: Dbxxxxx.xxuu <CR><LF>
    0        1
    123456789012  3   4

    Field Number
    1. D = depth record start character
    2. Band: A=Hi Freq, B=Low Freq
    3. Depth: in feet or meters
           Ex: DA  200.00 m*<CR><LF>
               DA  656.00ft*<CR><LF>
    4. Units: uu = ft = feet, uu = <SP>m = meters
```

HBOOK

```
    HBOOK REAL TIME PARAMETERS
      Data Err, Band, Depth (m), Reflectivity (-dBV),
        Temp (degC), Depth Range and Mode.

    NOTE: All parameters are returned in metric units
    only.
    28 Fixed Length ASCII Characters (leading zeroes
    displayed)
```

```
        1
        |2
        ||3
        ||| 4
        ||| |      5    6     7  8
        ||| |      |    |     |  |
    Ex: DEb ddd.dd -sss -tt.t rrrX <CR><LF>

        0        1         2
        12345678901234567890123456  7   8
```

Field Number
1. Dynamic Parameters List
2. Data error: E = gate error, <SP> = no error
3. Band: A = HF, B = LF
4. Depth: 12.345 < 25M, 123.45 > 25M
5. Reflectivity: -dBV, re: 1Vrms
6. Temperature: deg C
7. Range: 25, 50, 100, 150, 200m
8. Mode: A = auto, M = man

HBOOK STATIC PARAMETER HEADER (On COM 2)
Offset, Svel, Blanking, Frequency, Port2 Baud, Port2 Format, Ping rate, Range, Mode, Units, Gate, Standby

41 Fixed Length ASCII Characters (leading zeroes displayed)

This header appears in BSU Com Port 2 data output sentence each time a BSU parameter is changed.

```
     1 2     3    4      5   6 7 8  9   a
     | |     |    |      |   | | |  |   |b
     | |     |    |      |   | | |  |   ||c
     | |     |    |      |   | | |  |   |||d
     | |     |    |      |   | | |  |   ||||  e   f
     | |     |    |      |   | | |  |   ||||  |   |
     S +o.oo vvvv bbb.bb fff p s pp rrr XUGS <LF><CR>
(Meters)
     S +oo.o vvvv bbbb.b fff p s pp rrr XUGS <LF><CR>
(Feet)
              1         2         3               4
     123456789012345678901234567890123456789012345678  9   0    1
```

Field Number

1. BSU Static Parameters Header
2. Offset: in meters or feet
3. Speed of Sounder Velocity: in m/s or f/s
4. Blanking Gate: in meters or feet
5. Frequency in KHz
6. BSU Com Port 2 Baud: 1=9600, 2=19200, 3=38400, 4=57600, 5=115200
7. BSU Com Port 2 Output Sentence: 0=NMEA-DBT, 1=NMEA-DBS, 2=NMEA-DPT, 3=ODOM-DBT, 4=DESO-25, 5=HBOOK
8. BSU Ping Rate (Hz): 05, 10, 20, 30
9. Depth Range: in meters or feet
a. Mode: A=Automatic, M=Manual
b. Units of Measure: M=meters, F=feet
c. Tracking Gate Status: g=off, G=on
d. BSU Standby Status: S=stdby, R=run
e. Record Terminator 1
f. Record Terminator 2

DATA SENTENCE AVAILABLE FROM PC COM PORT

PC EXPORT DRIVER: IS ALWAYS ASSIGNED COM(x):19200,8,N,1

32 Fixed Length ASCII Characters (leading and trailing zeros displayed)

```
        1
        |2
        ||3
        ||| 4
        ||| |       5     6    7 8    9
        ||| |       |     |    | |    |
    Ex: UAE,ddd.ddd,oo.oo,vvvv,u,-rrr,bb <CR><LF>
        0        1         2         3
        12345678901234567890123456789012  3   4
```

Field Number

1. ID: U = Unabara data string
2. Band: A = Hi Freq, B = Low Freq
3. Data error: E = error, <SP> = no error
4. Depth:
5. Xdcr Offset:
6. Speed of Sound Velocity

7. Units: M = meters, F = feet
8. Bottom Reflectivity: -10 to -110dBV
9. Bottom loss: 0 to 40dB
10. Record Terminators: <CR><LF>

SET HBOOK BSU STATIC (non-changing) PARAMETERS ON COM 1…
COM 1:115200,8,N,1

ALL PARAMETERS ARE IN METRIC UNITS AND MUST BE CONVERTED BY THE CONTROL (or other) PROGRAM:
Offset (m), Velocity (m/s), Blanking (m), Frequency (khz),
COM2 Baud Index, COM2 Data Sentence Index, Max Ping Rate (Hz), Range (m), Units, Gate, Standby.

39 fixed characters plus <LF> <CR>

```
                                    a
                                    |b
                                    ||c
1 2     3    4      5   6 7 8  9    |||d
| |     |    |      |   | | |  |    ||||
S +o.oo vvvv bbb.bb fff p s pp rrr XUGS <LF> <CR>

0        1         2         3           4
12345678901234567890123456789012345678 9  0    1
```

Field Number
1. Static Parameters Block
2. Offset: +/- Meters
3. Speed of Sound Velocity: m/s
4. Blanking Gate: Meters
5. Frequency: 038,180,190,200,210,220,230,
240,250,260,270,280 KHz
6. COM2 Baud Rate Index:
0=9600, 1=19200, 2=38400, 3=57600, 4=115200
7. COM2 Data Sentence Index:
0=NMEA-DBT, 1=NMEA-DBS, 2= NMEA-DPT,
3=ODOM-DBT, 4=DESO-25, 5=HBOOK
8. Ping Rate: 5, 10, 20, 30 Hz
9. Depth Range: 025, 050, 100, 150, 200 Meters
a. Mode: A=automatic, M=manual
b. Data Sentences Units of Measure: M=Meters, F=Feet
c. Tracking Gate: g=Off, G=On
d. Standby Status: R=Run, S=Stdby (not used)
e. Record Terminator 1: <LF> (0x0A)

f. Record Terminator 2: <CR> (0x0D)

OTHER HBOOK BSU CONTROL COMMANDS ON COM 1 (Only):

1. ASCII character “@” places BSU in the standby mode.
2. ASCII character “#” places BSU in the run mode
3. ASCII control character <Ctrl><B> places BUS in the single ping mode.
4. ASCII control character <Ctrl><P> initiates a single ping and then enters the standby mode and waits for the next command.
5. ASCII control character <Ctrl><X> cause the BSU to exit the single ping mode and return to the run mode.
6. All of the above BSU commands are volatile and are not saved in the BSU’s flash memory and will be reset upon power up.

APPENDIX B

Data Wye Harness*

*** The <u>optional</u> Data Wye Harness allows the user to split the selected format data output from the BSU's COM 2 port into two outputs; one port to the user's PC for HYPACK or other mapping software and one port to the user's PC to allow automatic depth input to your HydroBar Sound Velocimeter/Bar Check Tool.**

For HydroBar information, visit: www.hydrobar.info

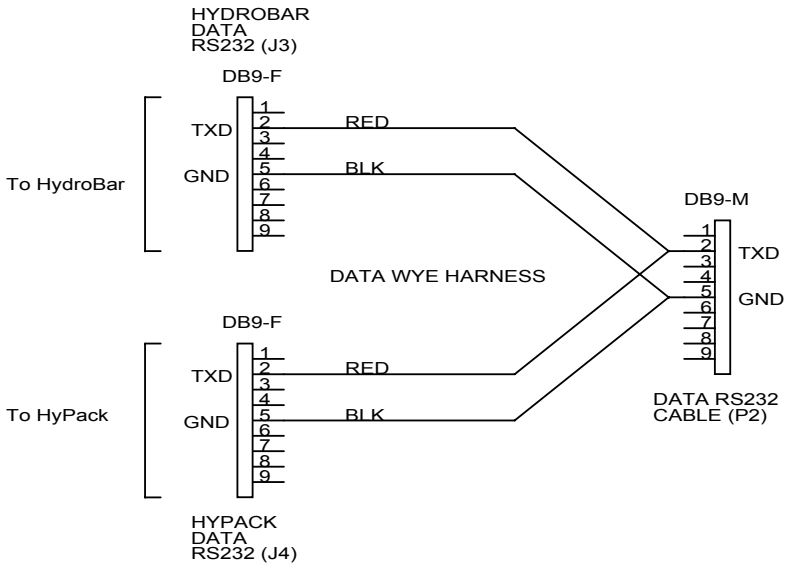

(P2) DB9-M above connects to (J2)DB9-F which is the COM 2 (Yellow shell) on HydroBook's Adapter Cable Assembly (see Figure 4 in user's manual)